K128

K128 - ICSP

K182

USB PICmicro® Programmers

DIY Electronics (HK) Ltd
PO Box 88458,
Sham Shui Po,
Hong Kong

http://www.kitsrus.com
mailto: peterhk@kitsrus.com

Last Modified 07 September 2004

Board Construction

The board is quite easy to construct but it is advisable to read through these notes before starting. The USB chip and all other surface mount components have been premounted to make construction easier.

WARNING

Be aware that the USB chip is sensitive to static electricity discharge and could be damaged by mishandling of the PCB. Be careful with the board and avoid touching any of the tracks or pads while assembling it. Try to handle it only by the edges.

The other chip in this kit is also sensitive to static discharge. This is the PIC16F628. Do not touch the pins and only handle it by the ends. A socket is supplied to allow for upgrades and easy assembly.

Starting

The first thing to do is inspect the PCB for shorted or open tracks or other damage, especially to the premounted components. Be aware of the static warning when doing this check. When you are satisfied that all is well, then you can proceed.

Make sure the PCB fits snugly into the plastic boc before proceeding. You may have to trim the sides with a file.

ALL COMPONENTS EXCEPT FOR THE LED AND ZIF SOCKET MOUNT ON THE **BOTTOM** SIDE OF THE PCB.

Start by mounting the 6MHz crystal. Before soldering it, make sure there is a small gap (~ 1mm) between it and the PCB. This is to keep the metal can of the component from shorting its own mounting pads.

Next, mount the 18 pin IC socket for the PIC16F628 chip. The indented end faces towards the USB chip. When placing the socket, make sure the pins are flush with the top of the PCB surface and not protruding above it before soldering.

Before soldering the USB connector, trim the 4 connector pins and the two support pins so that these leads are flush with the PCB top surface when inserted into the PCB.

The pins for the above two components have to be made flush with the PCB top surface otherwise the extra pin lengths won' t allow the ZIF socket to sit flat on the PCB surface.

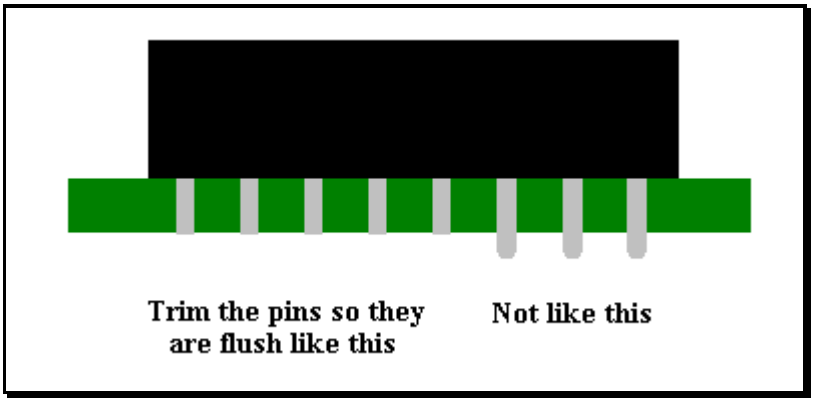

Next, mount all the electrolytic capacitors. These are polarity sensitive components so make sure they are mounted properly. The positive lead is longer than the negative lead, and the negative lead is also marked on the side of the capacitor.

On the PCB overlay, there are holes marked [+] as the positive lead for each of these components. There are 2 x 1uF and 1 x 10uF capacitors so please try not to get them mixed up. See the PCB overlay for the correct mounting positions.

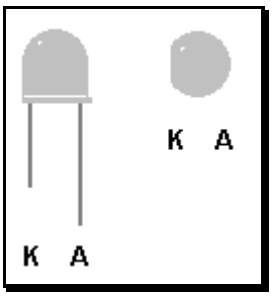

There is one LED that can be mounted next. Make sure it are oriented correctly and is mounted from the TOP PCB side. The anode (**A**) is marked on the PCB and is the longer of the two leads on the component. The Cathode has a flat surface on the LED body and is also marked on the board as (**K**).

Very carefully check your work at this stage, as the next part to mount is the ZIF socket. After mounting, this component hides a lot of soldered connections and will make error corrections very difficult. Inspect the board for dry or unsoldered joints and check all components for correct orientation and placement.

Now insert the preprogrammed PIC16F628 into its socket. Pin 1 is towards the USB socket. The finished board should look like the images shown here.

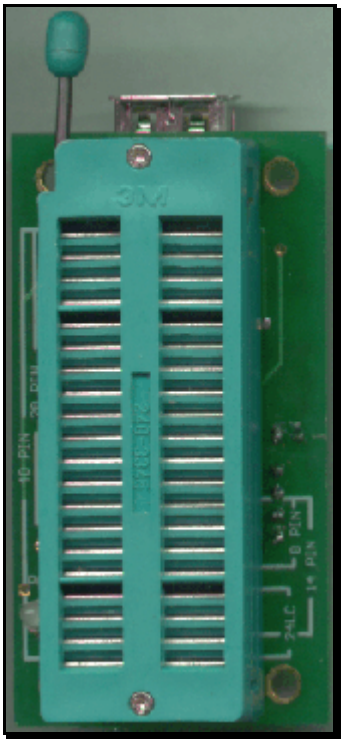

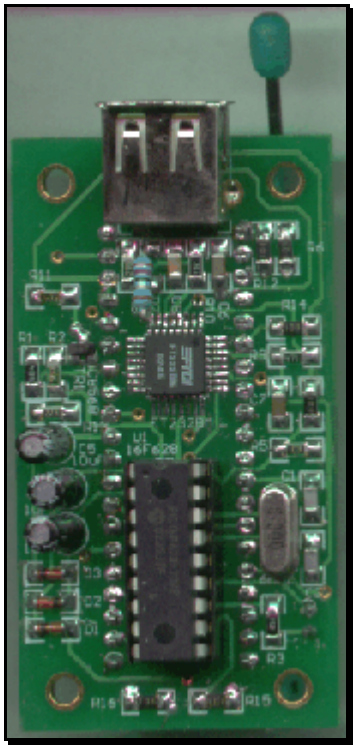

This completes the construction phase.

USB Drivers

To enable USB capability for your PC and this project you will need to install a special driver. This is a piece of software that handles the communications between the PC and the special USB chip on the programmer PCB.

Create a USB driver sub directory into the directory where your programmer software was installed. `C:\diyprog` was the default. Therefore you would have a new directory called `C:\diyprog\usb`.

The drivers come in 2 flavours, plug and play support and no plug and play support. As this programmer does not have plug and play support, that narrows it down to 1 choice.

You will need to visit this web page and download this driver.

VCP drivers for Win 98/2000/ME/XP (without PNP support)

http://www.ftdichip.com/FTDriver.htm

Download and unzip the file into the newly created USB directory.

Now visit this other web page and download the PDF application note that describes how to install the driver for your particular system.

http://www.ftdichip.com/FTApp.htm

For example you would download...

AN232-03 for Win 98

AN232-05 for Win2000

Download the PDF file into the USB driver directory listed above.

Open and follow the simple directions given in the PDF file. This should only take a few minutes to do.

When the driver installation is completed, connect a USB cable from the PC to the programmer board. This will power the board.

At this stage you *may* get a message from Windows saying that it has found new hardware.

Also the LED should flash on and change colors briefly.

If not, monitor and check the PCB components and make sure nothing gets too hot. If the PIC gets too hot to touch, disconnect the USB cable immediately as the PIC is most likely inserted the wrong way around. If this is the case, then they are quite tough little chips and it may have survived. Insert it the correct way and re-connect the USB cable. If the LED flashed as described earlier then it should be ok.

Disconnect the cable and insert the PCB into the mounting box provided with the kit. The PCB should be a nice snug fit and no screws should be necessary to hold it in place.

Now run MicroPro.exe which is the Windows® driver interface supplied with the kit.

Click `[File] -> Port` or double click the `COM x` label on screen to bring up the COM port window. Select the COM port that you selected for use for USB communications while installing the driver, then `OK`. If you don't know what port it is connected to, click on

`START - > Settings -> Control Panel`.

Then double click `System`.

Look for the `Device Manager` and go to `Ports (COM & LPT)`.

You will see `COM x` listed next to the `USB` label. `X` will be the COM port number for you to select in the MicroPro program.

The PC may take a short while to establish communications with the USB port. When it has done so, the COM port number will appear on screen and the programmer is ready for use on the USB port.

From MicroPro, make sure that Kit 128 is selected by clicking on

`FILE -> Programmer Style -> K128`.

If all is well, as a simple system test, click on

`OPTIONS -> Reset Programmer`

You should see the LED change color, then stay red. You should also see `Board Connected` appear on the MicroPro message bar.

Now select 16F84 from the chip select menu and click on Read. You should see the LED change to green while the programmer reads from a non existant chip. The screen will most likely fill with 0000's or 3FFF' s.

Your new programmer is now ready for use.

When using the USB interface, always power up the programmer by connecting it to the PC before starting MicroPro, and close MicroPro before disconnecting the programmer.

Failure to use this power up - power down sequence may result in a stalled or slow operating PC because of the non responding USB port.

PARTS LIST

Used	Part Type	Designators	Description
SEMICONDUCTORS			
1	FT232BM	U2	USB Converter
1	PIC16F628	U1	Preprogrammed Microcontroller
3	1N4148	D1, D2, D3	Diode
1	BC856B	TR1	PNP Transistor
1	6MHz	X1	Crystal
1	LED	L1	Bi-Color
RESISTORS all 1206			
2	27R	R7, R8	
1	470R	R9	
2	1K5	R3, R10	
7	10K	R4, R5, R6, R12, R14, R15, R16	
1	22K	R13	
1	47K	R11	
1	56K	R2	
1	680K	R1	
CAPACITORS			
2	22p	C1, C2	1206 Ceramic
1	33N	C8	1206 Ceramic
2	100N	C6, C7	1206 Ceramic
2	1uF	C3, C4	16V Electrolytic
1	10uF	C5	50V Electrolytic
MISCELLANEOUS			
1	Presoldered PCB	PCB1	
1	18pin IC SOCKET		
1	UT-5676	CN1	USB Connector
1	Plastic Box		
K128 ICSP			
1	ICSP Header	CN2	5 Pin Header

K128 ICSP Notes

This version of K128 has a 5 pin header for ICSP programming.

The ICSP wire colors are as follows:

VPP	Red
DAT	Green
CLK	White
VCC	Black
GND	Yellow

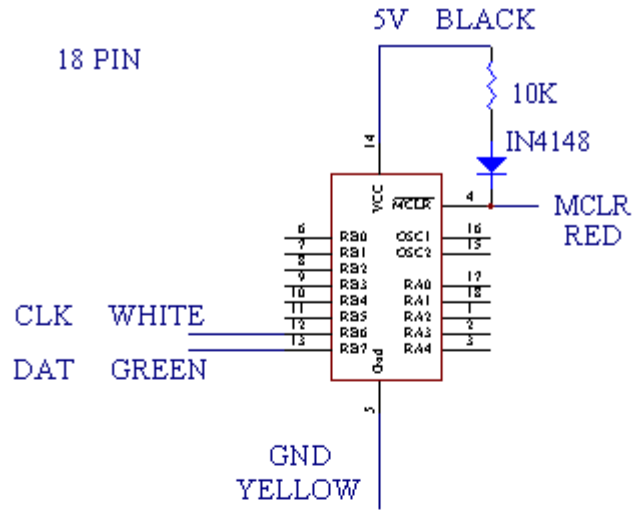

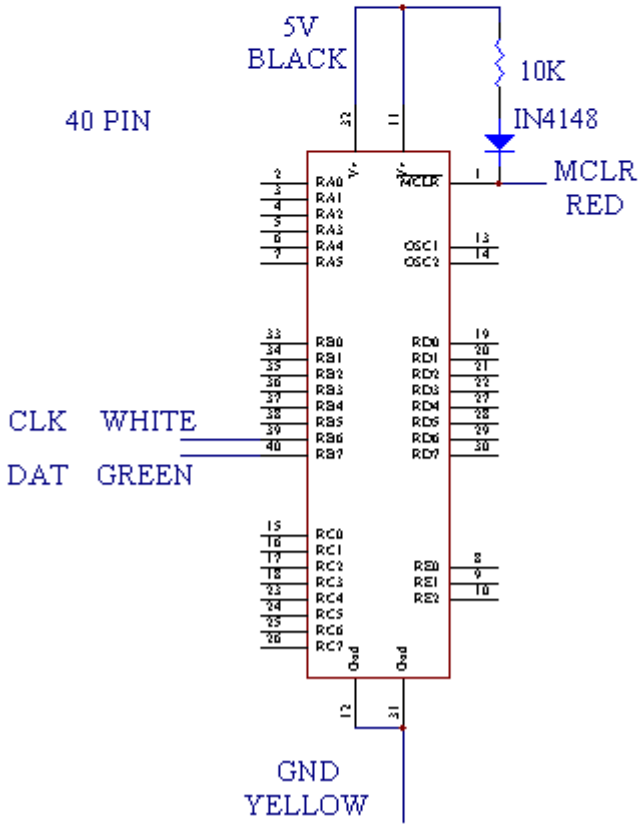

ICSP Connection Examples

Please note: Some PICmicro® chips require the LVP pin to be tied low while programming. See the respective data sheet for more information.

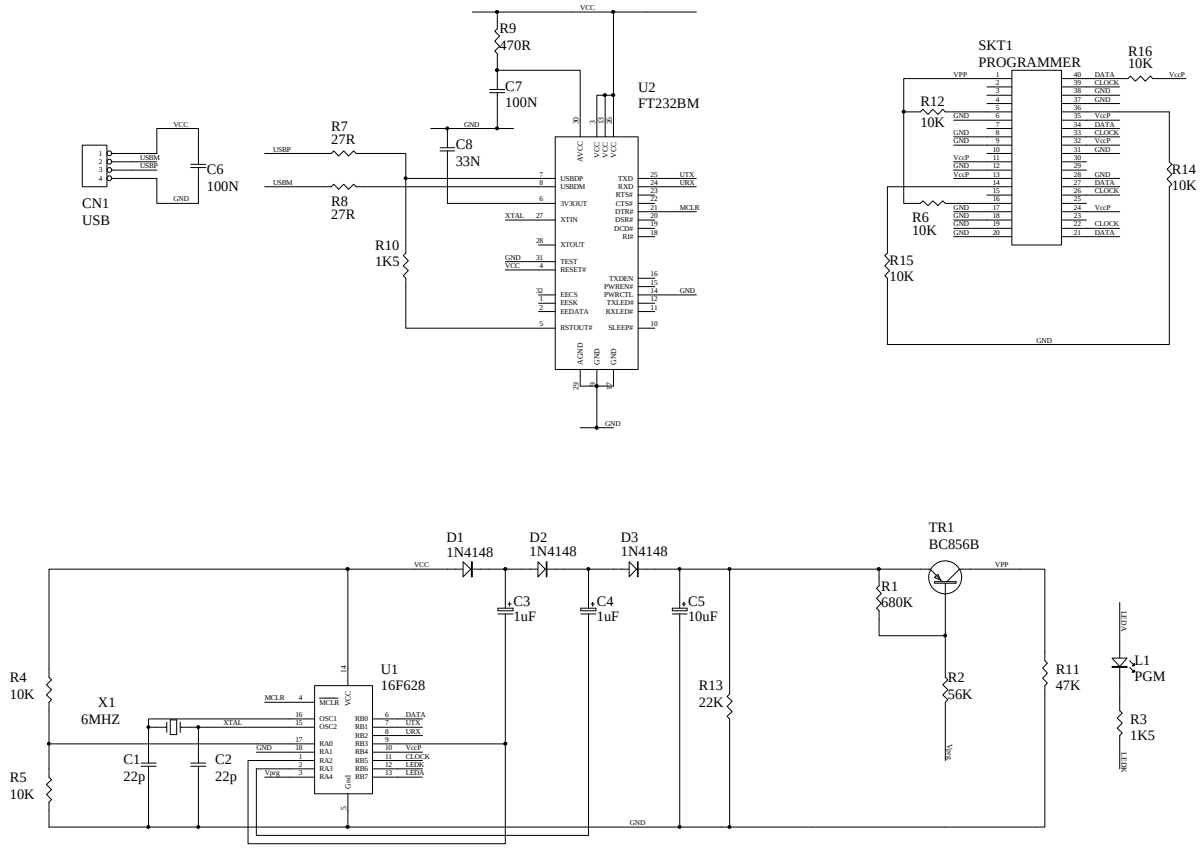

Title			
Size: C	Number		Revision
Date: 31-Mar-2003		Sheet of	
File: C:\DIYPRO~1\PROGRA~1\SCHEMSKT.ddb		Drawn By:	

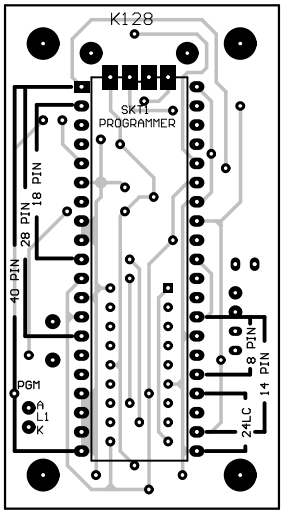
K128
SK1
PROGRAMMER
40 PIN
28 PIN
18 PIN
PGM
A
L1
K
24LC
8 PIN
14 PIN

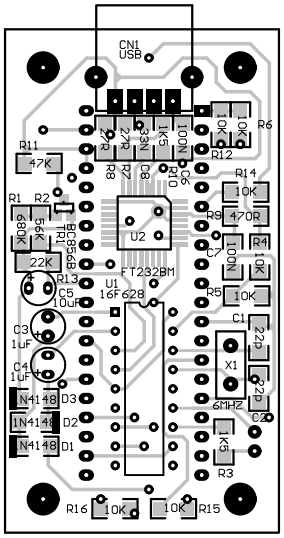
CN1
USB
R6
10K
10K
R12
R11
47K
R8
R7
C8
R10
C6
R14
10K
R1
R2
680K
56K
TR1
BC856B
U2
R9
470R
R4
C7
100N
10K
22K
R13
C5
10uF
U1
16F628
FT232BM
R5
10K
C1
22p
C3
1uF
C4
1uF
X1
6MHZ
22p
C2
1N4148
D3
1N4148
D2
1N4148
D1
1K5
R3
R16
10K
10K
R15

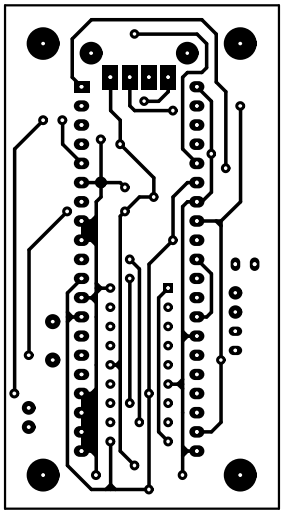

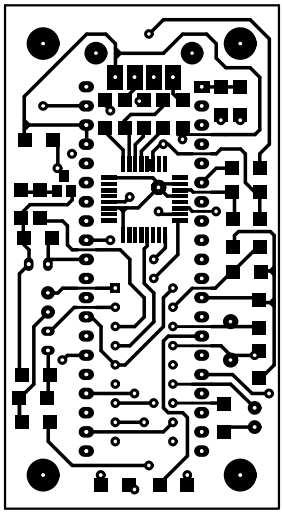

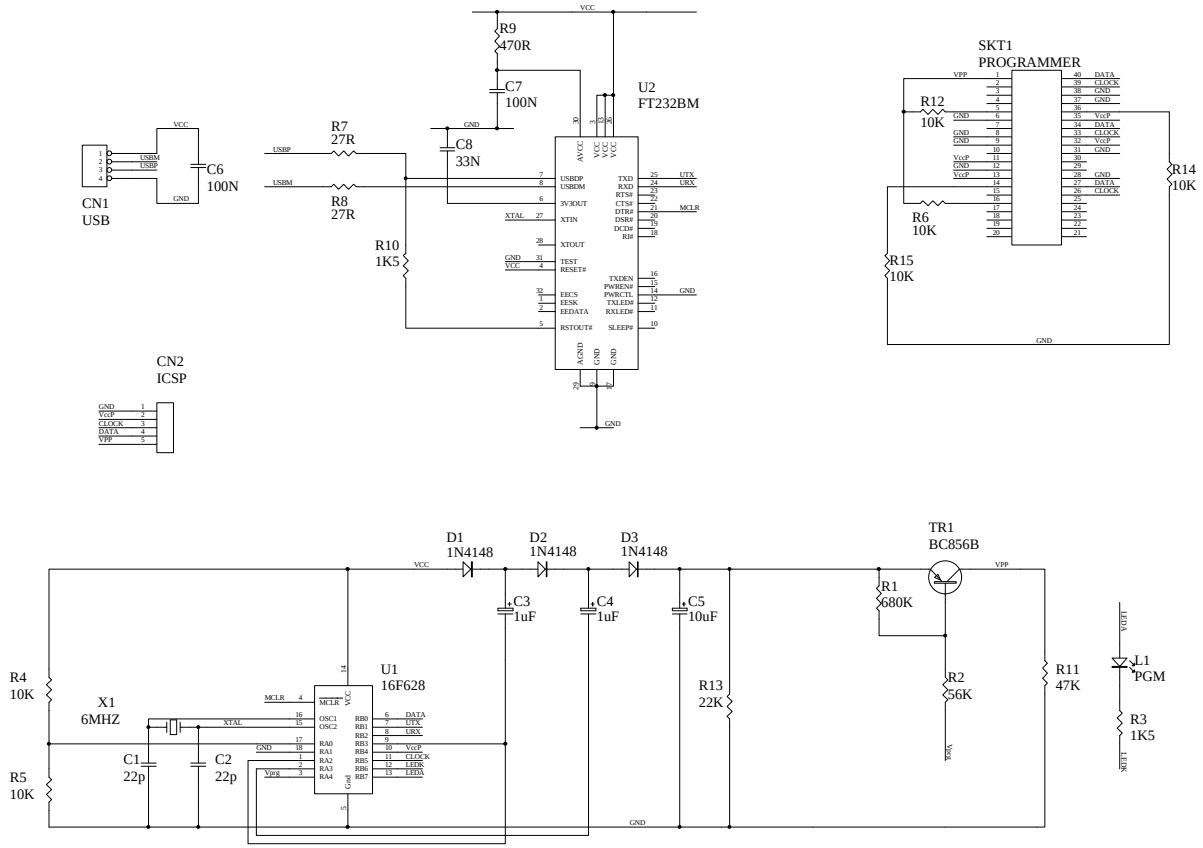

Title			
Size: C	Number		Revision
Date: 30-Aug-2004		Sheet of	
File: C:\PROGRAM\SCHEMS\K12BB.SCH		Drawn By:	

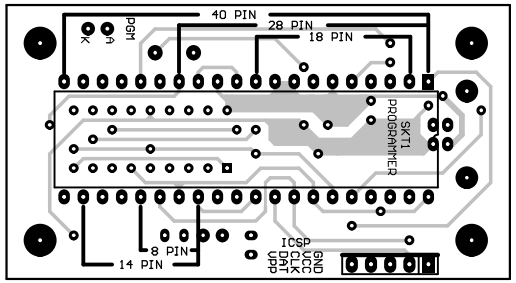
40 PIN
28 PIN
18 PIN
PGM
SKT1
PROGRAMMER
8 PIN
14 PIN
ICSP
VPP
DAT
CLK
VCC
GND

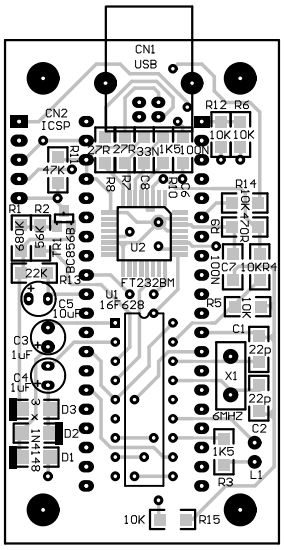
CN1
USB
CN2
ICSP
R12 R6
10K 10K
27R 27R 33N 1K5 100N
R11
47K
R8 R7 C8 R10 C6
R14
10K 470R
R1 R2
R9
100N
C7 10K R4
R13
22K
U2
FT232BM
U1
16F628
C5
10uF
R5
10K
C1
22p
X1
22p
6MHZ
C2
1K5
R3
L1
C3
1uF
C4
1uF
D3
D2
D1
1N4148
10K
R15

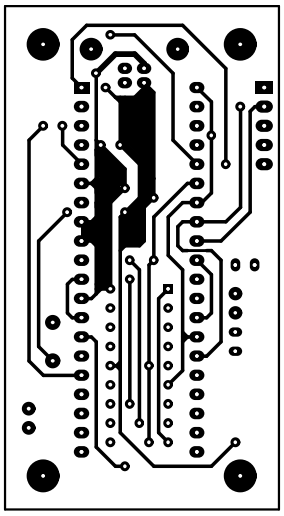

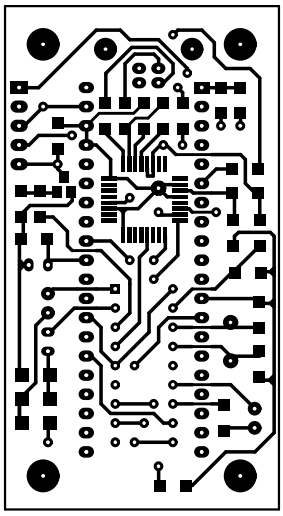

K182 programmer.

The K182 PICmicro® programmer is exactly the same as K182 ICSP except it does not have the ZIF socket.

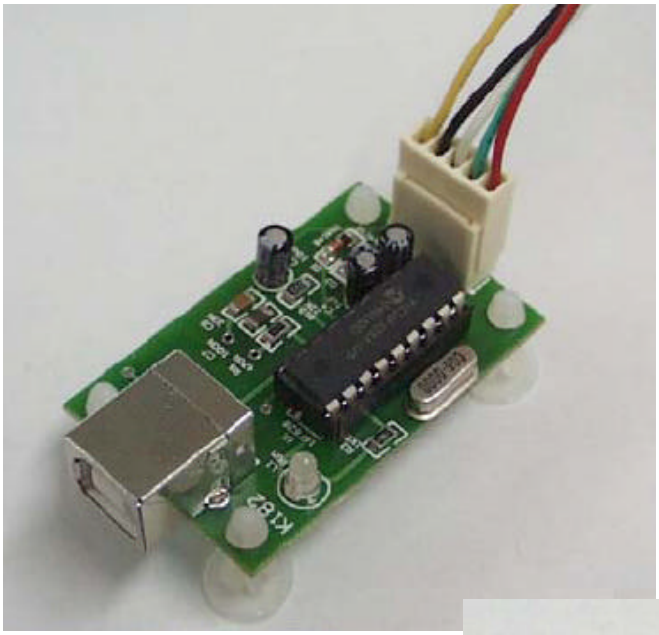

PARTS LIST

Used	Part Type	Designators	Description
SEMICONDUCTORS			
1	FT232BM	U2	USB Converter
1	PIC16F628	U1	Preprogrammed Microcontroller
3	1N4148	D1, D2, D3	Diode
1	BC856B	TR1	PNP Transistor
1	6MHz	X1	Crystal
1	LED	L1	Bi-Color
RESISTORS all 1206			
2	27R	R7, R8	
1	470R	R9	
2	1K5	R3, R10	
7	10K	R4, R5	
1	22K	R13	
1	47K	R11	
1	56K	R2	
1	680K	R1	
CAPACITORS			
2	22p	C1, C2	1206 Ceramic
1	33N	C8	1206 Ceramic
2	100N	C6, C7	1206 Ceramic
2	1uF	C3, C4	16V Electrolytic
1	10uF	C5	50V Electrolytic
MISCELLANEOUS			
1	18pin IC SOCKET		
1	UT-5676	CN1	USB Connector
1	ICSP Header	CN2	5 Pin Header

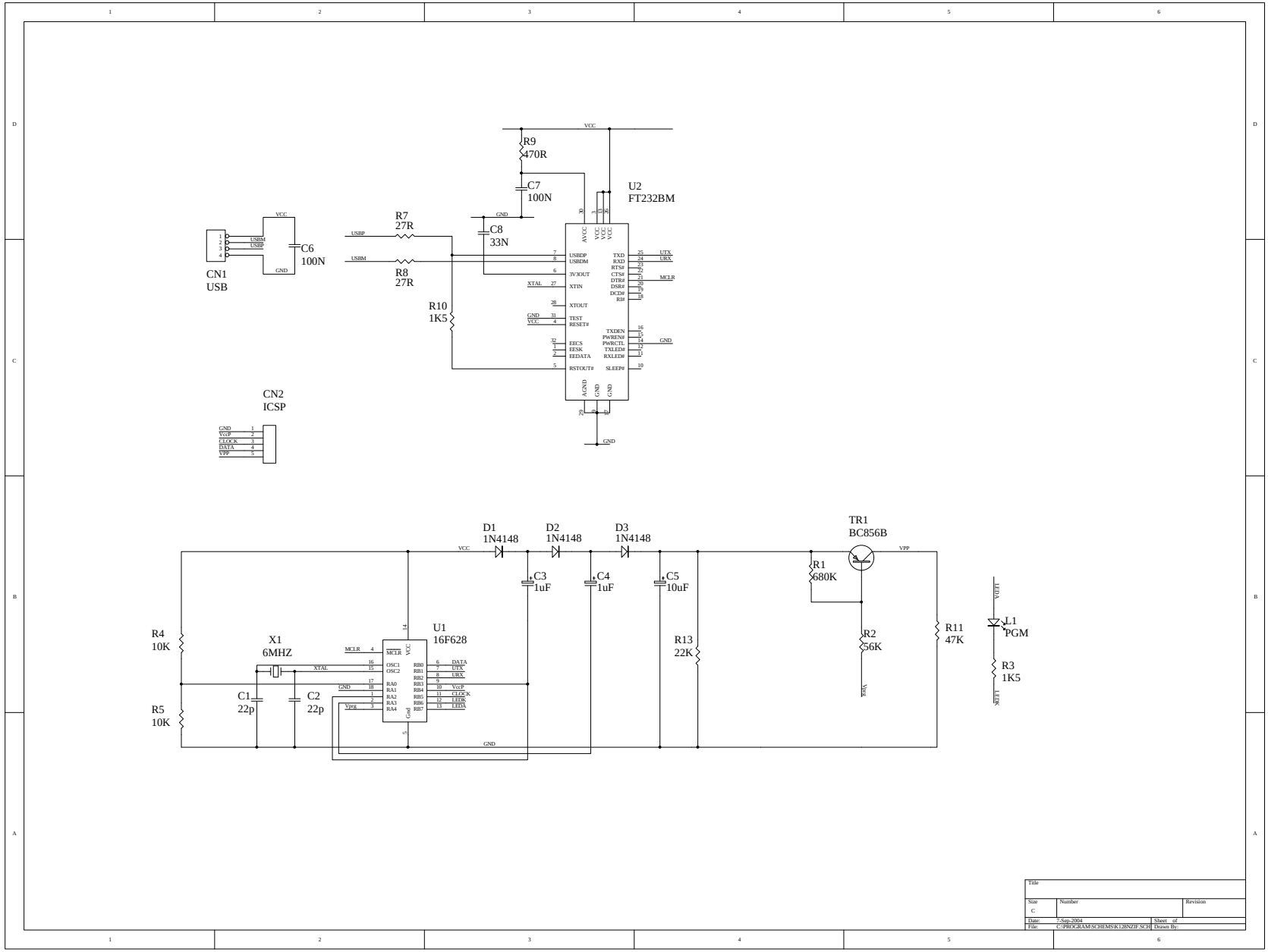

Title			
Size: C	Number		Revision
Date: 7-Sep-2004		Sheet of	
File: C:\PROGRAM\SCHEMS\K128NZIF.SCH		Drawn By:	

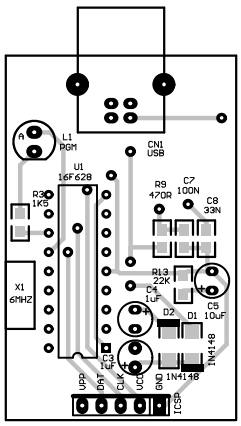
L1
PGM
CN1
USB
U1
16F628
R3
1K5
R9
470R
C7
100N
C8
33N
X1
6MHZ
R13
22K
C4
1uF
C5
10uF
D2
D1
1N4148
C3
1uF
1N4148
VPP
DAT
CLK
VCC
GND
ICSP

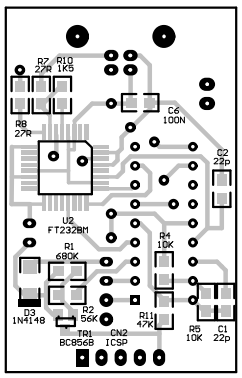
R7
22R
R10
1K5
C6
100N
R8
27R
C2
22p
U2
FT232BM
R1
680K
R4
10K
D3
1N4148
R2
56K
R11
47K
R5
10K
C1
22p
TR1
BC856B
CN2
ICSP
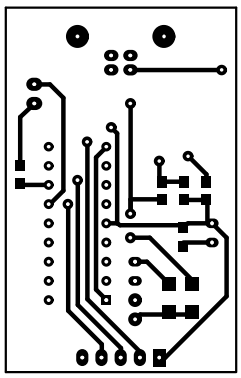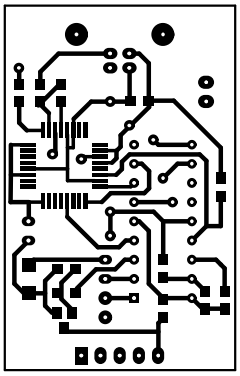
L1